中国有色集团
CNMC

TEBON®
特邦

桂林特邦新材料有限公司

Circular Saw Blades



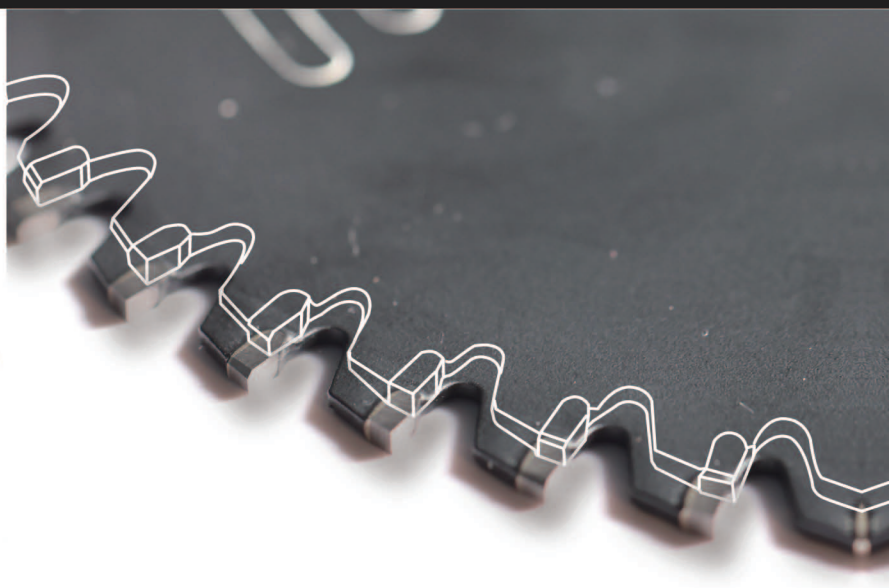

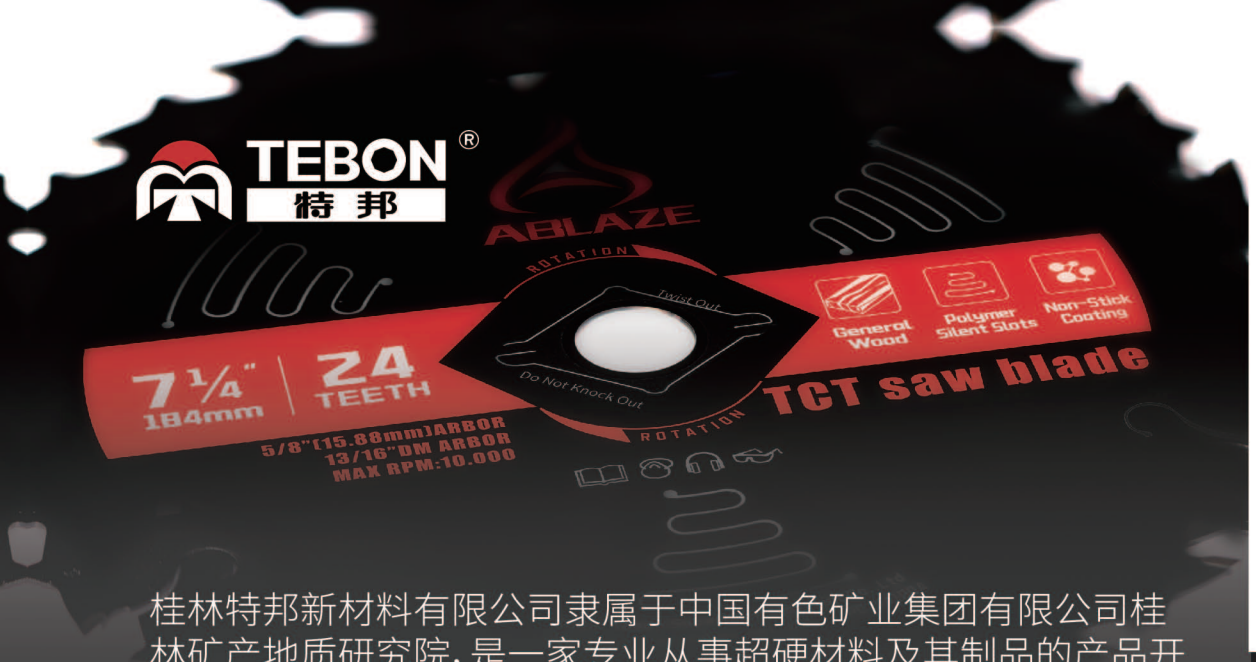



桂林特邦新材料有限公司隶属于中国有色矿业集团有限公司桂林矿产地质研究院，是一家专业从事超硬材料及其制品的产品开发、生产、检测、销售和服务的高新技术企业。本公司拥有强有力的产品开发队伍、先进的生产设备、科学的产品质量保证体系和严格的管理制度，三十多年来产品不断创新，公司持续发展。
本公司生产的合金类锯片，包括通用系列、金属切割系列及 PCBN 系列，适用于切割各类木材、板材、金属等。
公司秉承团结、诚信、创新、发展的企业精神，坚持客户第一，市场先导的经管理念，持续创新，追求卓越，以质量为本，打造优质品牌，充分满足顾客期望。

Guilin Tebon Superhard Material Co., Ltd (affiliated to Guilin Research Institute of Geology forMineral Resources, which is a part of China Non-ferrous Metal Mining (Group) Co., Ltd, is ahigh-tech company specializes in developing, manufacturing, testing, distribution andproviding services for superhard materials and products. With our powerful R&D team.advanced equipment,and scientific manageing/QC system, we have been maintainingproducts innovation and company developing for over three decades.
Our circular saw blades are carefully engineered for cutting wood, panels, ferrous andnon-ferrous metals. We also supply PCBN series blades for cutting fiber cement and alsohardwood floors.
Focusing on the principle of "Unity, Sincerity, Innovation, and Development", we always striveto fulfill our customers' needs as well as requirements of the market.





2 硬质合金锯片产品基础介绍

1、齿形结构 Variety of grinds for every job



Flat Top Grind [FTG]

The teeth are flat on top for this grind. Used for fast ripping of soft wood, hardwood and for general purpose use.



Alternate Top Bevel [ATB]

Has two different teeth alternating to create a shearing effect. Used for crosscutting hardwoods, softwoods, chipboard, MDFply-wood and for general purpose use.



Alternate Top Bevel [ATB+R] with Raker

This grind comes in a trio of teeth. It is a combination ofthe ATB and FTG and can be used for crosscutting and ripping.

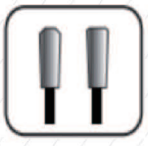

Modified Triple Chip Grind [M+TCG]

Similar to the TCG grind, the flat tooth has been modifed to have a slight bevel. This helps it withstand harder materials such as ferrous metals and stainless steel



Triple Chip Grind [TCG]

This grind consists of one flat-tooth followed by a beveled tooth that is slightly higher. The higher tooth helps eliminate chipping in more brittle materials by cutting a finer line before being followed by the rougher ripping cut of the flat top tooth.
Excellent for cutting laminates, chipboard,MDF, plywood, plexiglass, plastic materials and non-ferrous metals.

2、使用的设备 Choose your tool



Trim Saw



Circular Saw



Miter Saw



Table Saw



Low RPM Metal Saw

3、切割材料 Choose your material

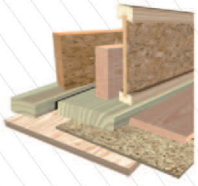

Wood Cutting Blades

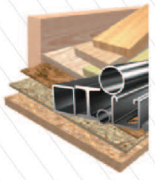

Wood & Metal Cutting Blades

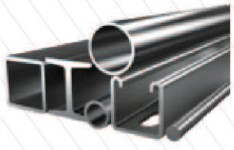

Metal Cutting Blades



Aluminum, Plastics & Composites

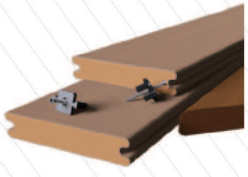

Composite Decking

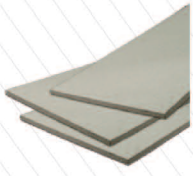

Fiber Cement



Laminate Flooring

1st TWG General Purpose/Framing Saw Blade







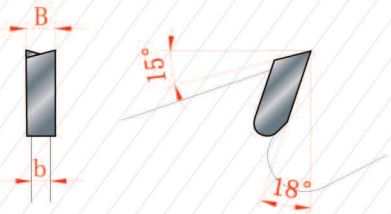

Item No.	Diameter		Tips Dimensions				Arbor
	Inch	mm	Teeth	Hook	Kerf	齿形	
TWG0450T24	4-1/2"	114	24	18	1.5	ATB	DM5/8"
TWG0550T18	5-1/2"	140	18	18	1.5	ATB	DM5/8"
TWG0650T18	6-1/2"	165	18	18	1.5	ATB	DM5/8"
TWG0650T24	6-1/2"	165	24	18	1.5	ATB	DM5/8"
TWG0650T40	6-1/2"	165	40	18	1.5	ATB	DM5/8"
TWG0725T24	7-1/4"	184	24	18	1.5	ATB	DM5/8"
TWG0725T40	7-1/4"	184	40	15	1.5	ATB	DM5/8"
TWG0825T24	8-1/4"	209	24	18	1.5	ATB	DM5/8"
TWG1000T40	10"	250	40	15	3.2	ATB	5/8"
TWG1000T60	10"	250	60	15	3.2	ATB	5/8"
TWG1200T44	12"	350	44	15	3.2	ATB	1"
TWG1200T60	12"	350	60	15	3.2	ATB	1"

Features

1. Non-stick coating on the body reduces friction and heating during cutting.
2. Polymer filled vents reduces noise and vibration.
3. Excellent quality carbide provides long life.

Application

1. For use with circular saws, miter saws and table saws.
2. Cutting nail embedded wood, acrylic, plywood, composite decking, vinyl, plastic.

TWD Demolition Saw Blade 2nd



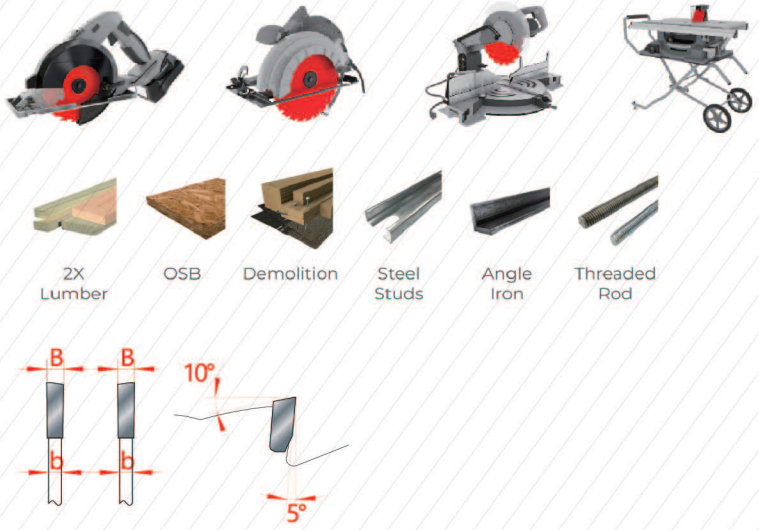

Item No.	Diameter		Tips Dimensions				Arbor
	Inch	mm	Teeth	Hook	Kerf	齿形	
TWD0650T24	6-1/2"	165	24	18	1.5	ATB+T	DM5/8"
TWD0650T44	6-1/2"	165	44	18	1.5	ATB+T	DM5/8"
TWD0750T24	7-1/4"	184	24	18	1.5	ATB+T	DM5/8"

Features

1. Non-stick coating on the body reduces friction and heating during cutting.
2. Polymer filled vents reduces noise and vibration.
3. Excellent quality carbide provides long life.

Application

1. For use with circular saws, miter saws and table saws.
2. Cutting nail embedded wood, acrylic, plywood, composite decking, vinyl, plastic.

3rd TWM Wood/Metal Cutting Saw Blade



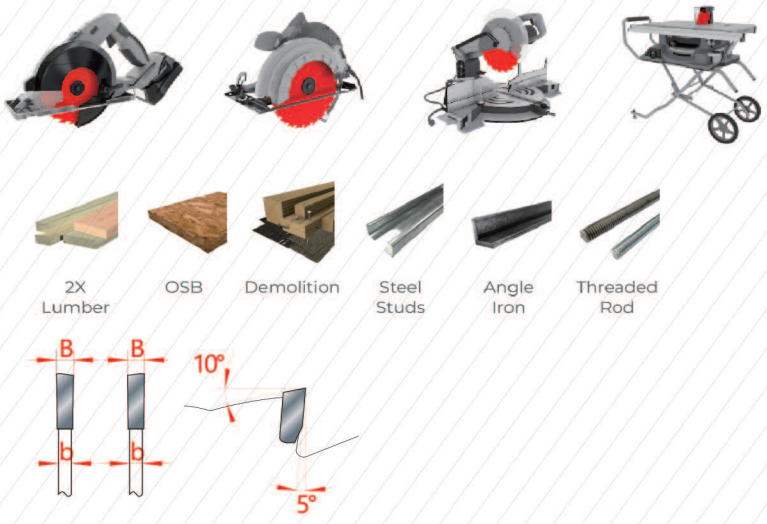

Item No.	Diameter		Tips Dimensions				Arbor
	Inch	mm	Teeth	Hook	Kerf	齿形	
TWM0650T32	6-1/2"	165	32	5	1.8	ATB	DM5/8"
TWM0725T24	7-1/4"	184	24	5	1.8	ATB	DM5/8"
TWM0725T36	7-1/4"	184	36	5	1.8	ATB	DM5/8"

Features

1. Non-stick coating on the body reduces friction and heating during cutting.
2. Polymer filled vents reduces noise and vibration.
3. Exellent quality carbide provides long life.
4. No need to change blades when cutting wood and metal at the same time.

Application

1. For use with handheld circular saws, miter saws and table saws.
2. cutting clean wood and wood with nails, metal.

5th TFM Ferrous Steel Cutting Saw Blade



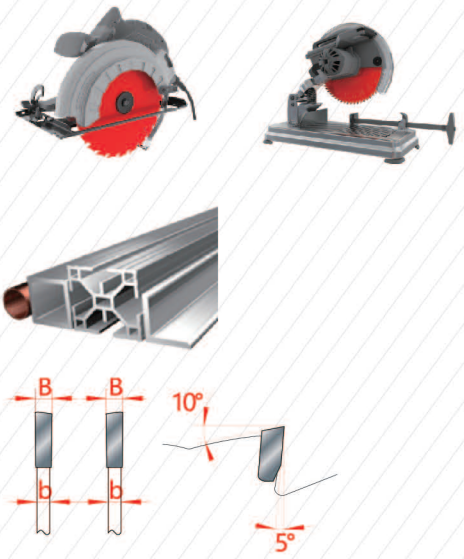

Item No.	Diameter		Tips Dimensions				Arbor
	Inch	mm	Teeth	Hook	Kerf	齿形	
TFM0650T48	6-1/2"	165	48	0	1.6	TCG	DM5/8"
TFM0725T36	7-1/4"	184	36	2	1.9	TCG	DM5/8"
TFM0725T48	7-1/4"	184	48	2	1.9	TCG	DM5/8"
TFM0725T56	7-1/4"	184	56	2	1.9	TCG	DM5/8"
TFM0725T70	7-1/4"	184	70	-5	1.9	TCG	DM5/8"
TFM0900T45	9"	230	45	0	1.9	TCG	1"
TFM1000T50	10"	250	50	0	2.1	M+TCG	1"-5/8"
TFM1200T50	12"	300	50	0	2.1	M+TCG	1"
TFM1400T72	14"	350	72	0	2.1	M+TCG	1"

Features

1. Non-stick coating on the body reduces friction and heating during cutting.
2. Polymer filled vents reduces noise and vibration.
3. Exellent quality carbide provides long life.

Application

1. For use with circular saws, and miter saws.
2. Cutting aluminum, copper, plastics, brass, & fiberglass.

TPCD PCD Fiber Cement Blade 6th



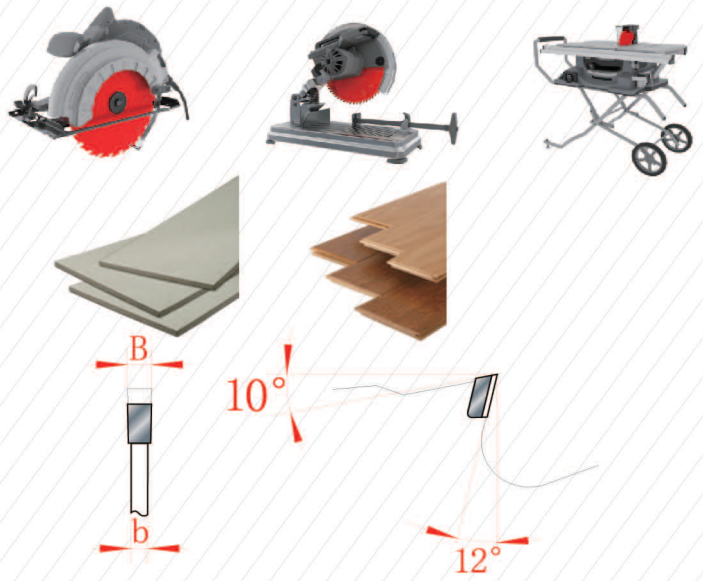

Item No.	Diameter		Tips Dimensions				Arbor
	Inch	mm	Teeth	Hook	Kerf	齿形	
TPCD0725T04	7-1/4"	184	4	11	1.9	FTG	DM5/8"
TPCD1000T06	10"	250	6	11	2.2	FTG	5/8"
TPCD1200T08	12"	300	8	11	2.2	FTG	5/8"

Features

1. Non-stick coating on the body reduces friction and heating during cutting.
2. Polymer filled vents reduces noise and vibration.
3. Exellent quality PCD provides long life.

Application

1. For use with circular saws, miter saws, and table saws.
2. For all fiber cement products.

7th TPCD PCD Laminated Hardwood Flooring Blade



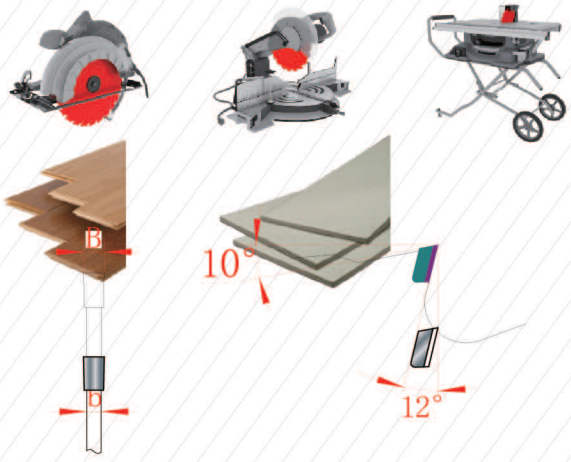

Item No.	Diameter		Tips Dimensions				Arbor
	Inch	mm	Teeth	Hook	Kerf	齿形	
TPCD0725T08	7-1/4"	184	8	11	1.9	FTG	DM5/8"
TPCD1000T12	10"	250	12	11	2.3	FTG	5/8"
TPCD1200T16	12"	300	16	11	2.4	FTG	1"

Features

1. Non-stick coating on the body reduces friction and heating during cutting.
2. Polymer filled vents reduces noise and vibration.
3. Exellent quality PCD provides long life.

Application

1. For use with circular saws, miter saws, and table saws
2. For laminate flooring, hardwood flooring, engineered flooring, bamboo, and other laminate flooring

TCD Composite Decking Blade



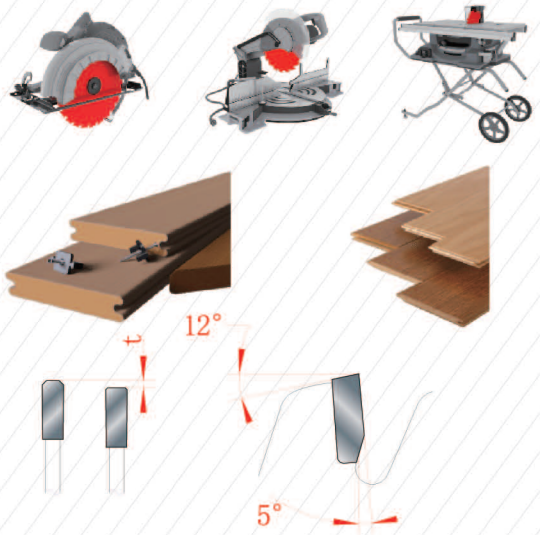

Item No.	Diameter		Tips Dimensions				Arbor
	Inch	mm	Teeth	Hook	Kerf	齿形	
TCD0725T44	7-1/4"	184	44	-3.3	1.65	TCG	DM5/8"
TCD0825T60	8-1/4"	209	60	-3.8	2.65	TCG	DM5/8"
TCD1000T72	10"	250	72	-3	2.6	TCG	5/8"
TCD1200T84	12"	300	84	-3	2.6	TCG	1"
TCD0725T44	7-1/4"	184	44	-3.3	1.65	TCG	DM5/8"

Features

1. Non-stick coating on the body reduces friction and heating during cutting.
2. Polymer filled vents reduces noise and vibration.
3. Exellent quality carbide provides long life.

Application

1. For use with circular saws, miter saws, and table saws.
2. For high quality finish cuts in composite material and cellular PVC.

4 锯片使用注意事项

作业环境 / Operating Conditions

・机械要安装保护罩，防止因锯片破损、碎片飞散等造成伤害。
・无关系者禁止靠近作业场所。
・作业场所应远离易燃、易爆品。
・Machine cover is essential to minimize the injuries by flying broken blades.
・Rrelevant people are allowed in the work shop.
・Flammables and explosives should be kept away from the work floor.



服装、防护用具 / Safety Measures

・作业者必须佩带保护眼镜，防止因锯片破损、碎片飞散等造成伤害。
・作业都必须注意领带及袖口，不能戴手套，长发要置于工作帽内，防止被卷入机器，发生危险。
・Wear glasses when working, to prevent from injuries by broken blades.
・Watch out for your ties and sleeves. Long hair shouldbe kept inside the cap, and no gloves are allowedduring operation.

使用前的准备 / Before Use

・确保机器状态良好，主轴无变形、无振动、轴径公差为h7。
・检查锯片有无欠损、脱落、异常磨耗以及本体的弯曲扭曲、破裂等异常现象，以防锯片破损、飞散造成伤册。
・确认所选锯片是否适合被切削材料，防止锯片的异常磨耗、脱落、切割不良、过热等异常状况发生。如选择错误，可能造成锯片破损、碎片飞散，发生意外事故。
・Ensure the machines are in good condition with no deformation and no spindle vibration, the spindle's running tolerance can be h7。
・Make sure the blades are not excessively worn-out.blade body has no defomation or breaks leat injuries occur.
・ Make sure appropriate sawblades are used.

安装 /Installation

・保证锯片回转方向与机器主轴回转方向一致，如果方向相反，会造成刀片脱东、碎片飞散，发生意外事故。
・选择内径与锯片内径一致、外径为锯片外径1/3略大(多片锯宜采用锯片外径1/2)的法兰盘，确认其无异常磨虚耗、弯曲变形、表面洁净无异物附着。保证锯片内径与机器轴径之间无过大间隙，安装好法兰盘，拧紧螺母。
・作业前，确认锯片前方无人。然后空转，检查机器有无振动、锯片有无横向及径向摆动等异常现象。
・锯片的再加工(内径修正、定位孔加工等)必须由厂方进行。如果加工不良，会影响产品使用效果，并且可能发生危险。

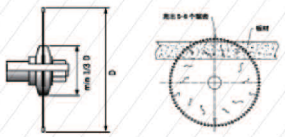

・安装时，一般锯片高出板材5-6锯齿为宜。
・Ensure the sawblade turns in the same direction as the spindle does. If not, accidents are likely to occur.
・Choose the flange whose inner diameter is the same as that of the sawblade but the outer diameter is a little larger than 1/3(for multi-rip sawblade is 1/2) of the sawblade. Ensure the flange isclean, not over worn, bent and distorted shape.
・Check the tolerance between the sawblade and the spindle.Install the flange and fasten the screw.
・Be sure no people stand in front of the machine when startingthe machine. Do not feed, just to check whether there is any vibration, radial or axial run out.
・Sawblade reprocessing such as bore trimming or reboring.should be finished by the factory. Poor reprocessing would lead to poor quality and may cause injuries.
・While installation, the sawblade should be 5-6 teeth higher thanthe board surface.

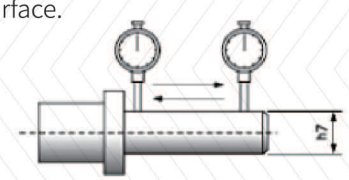

使用中 /In Use

・使用时，被切削材料需要固定，以免造成异常切入，从而导致锯片破损、碎片飞散，发生意外事故。
・使用时，发现声音和振动异常、切割面粗糙、弯曲时，必须终止作业，及时检查，排除故障。如继续使用，会造成锯片破损、碎片飞散，发生意外事故。
・In operation wood materials should be properly fixed, if not,abnormal cutting may occur.
・The operation must be stopped rightly once unusual noise and vibration occurs, if not, rough surface and tip-breaking may occur.

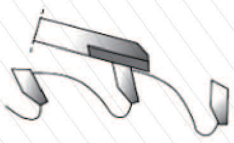

使用后 /After Use

・当锯片不再锋利、切断面粗糙时，必须及时进行再研磨。否则，会影响使用效果，并可能造成锯片报废，发生意外事故。
・再研磨必须由可信赖的专门厂家进行，不能改变原角度。
・Sawblades should be resharpened because dull sawblades may affect cutting effect and lead to accidents.
・Resharpening should be made by professional factories,not changing the orginal angle degrees.

锯、切工艺参考 5

材料切削速度表 /Workpiece Material Cutting Speed Table

材料 Workpiece Material	切削速度(m/s) Cutting Speed	材料 Workpiece Material	切削速度(m/s) Cutting Speed
Soft Woods 软木	50~90	MDF 中密度板	30~60
Hard Woods 硬木	50~90	Particle Boards 创花板	60~80
Plywood Boards 胶合板	50~80	Al Alloys 铝合金	60~80
Plastic Laminated Particle Boards 三聚氰胺贴面板	60~80	Laminated Boards 层压板	40~80
Thermosets (Pertinax, Restitex, etc.) 热固塑料	15~50	Thermoplastic(PA, PE, PMMA etc.) 热塑塑料	30~70

锯片外径、厚度对应转速表 /Determination of RPM

Body Thickness 本体厚度(b) \ 外径(D) Diameter	200	250	300	350	400	450	500
1.0	8000	4800	●	●	●	●	●
1.2	●	5200	●	●	●	●	●
1.6	●	5800	4800	●	●	●	●
2.0	●	6800	6200	4500	3400	●	●
2.4	●	8000	7200	5600	4000	3500	2600
2.8	●	●	8000	6500	4700	4000	3000
3.0	●	●	●	6800	5000	4400	3200
3.2	●	●	●	7200	5400	4700	3500
3.8	●	●	●	8000	6400	5400	4100
4.4	●	●	●	●	7500	6000	4800

每齿进给量 /Feedrate Per Tooth

材料 Workpiece Material	每齿进给量 (mm/tooth) Feedrate per Tooth	材料 Workpiece Material	每齿进给量 (mm/tooth) Feedrate per Tooth
Soft Woods 软木	0.10~0.30	MDF 中密度板	0.05~0.25
Hard Woods 硬木	0.06~0.15	Particle Boards 创花板	0.10~0.25
Plywood Boards 胶合板	0.05~0.25	Al Alloys 铝合金	0.03~0.08
Plastic Laminated Particle Boards 三聚氰胺贴面板	0.02~0.06	Laminated Boards 层压板	0.05~0.10
Thermosets (Pertinax, Restitex, etc.) 热固塑料	0.02~0.05	Thermoplastic(PA, PE, PMMA etc.) 热塑塑料	0.05~0.08

特邦 让切割更简单

CUTTING IS NEVER SO EASY

TEBON® 特邦

(+86)0773-5859710 国内
(+86)0773-5868880 国外
www.tebon.net.cn
广西壮族自治区桂林市铁山路20号